Power-SPIN

1-phase input

Low-Power Programmable DC Power Supply

[0.6kW, 0.9kW, 1.5kW, 1.8kW]

In a Nutshell

The POWER-SPIN series is a small volume, high performance and high power density programmable DC source. The 1U/19 "full width \ half width design makes the single device more lightweight and the cabinet integration more convenient. The maximum output power 1800W,it can be applied in different fields such as laboratory testing, system integration, andlarge-scale production line testing.

Features

- Output Power：600W/900W/1500W/1800W；
- Output Voltage：0～3000V；
- Output current：0～120A；
- Small size,1U/half 19 inch or full 19 inch;
- Input high Power factor, low harmonic;
- Sequence and waveform editing function;
- Equipped with battery charging function;
- Comprehensive protection function for over voltage, over current, over power, over temperature;
- Support to set output time, can control and record output time;
- Support Voltage compensation remotely;
- OLED display wide viewing angle, high brightness;
- Standard RS232 and LAN optional RS485;
- Support standard SCPI and Modbus-RTU communication protocol.

CV, CC priority

When the power output is connected to an inductive or capacitive load, it can cause a certain degree of overshoot in the output current or voltage. In mild cases it can triggerthe protection of the tested equipment, and in severe cases it can directly cause damage to the tested equipment. The POWER-SPIN series have CV and CC output priority functions, it can suppress output overshoot effectively and its impact.

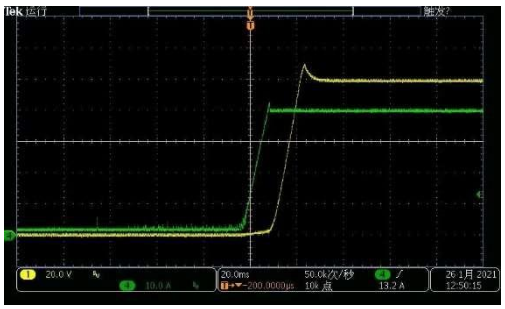

CV priority（high speed built Overshoot of Voltage，Current）

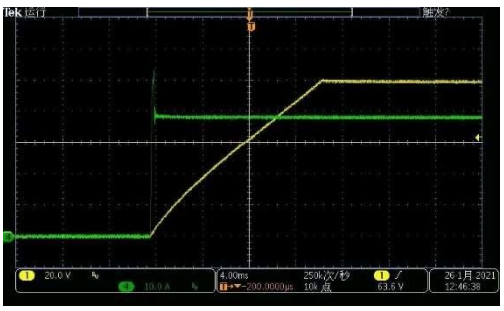

CC priority（high speed built Overshoot of Current,Voltage）

Sequence function

In the sequence output mode, complex output changes can be simulated based on user edited sequence parameters. Sequence output function, with menu option "SEQ", allow user toedit voltage and current waveform themselves.

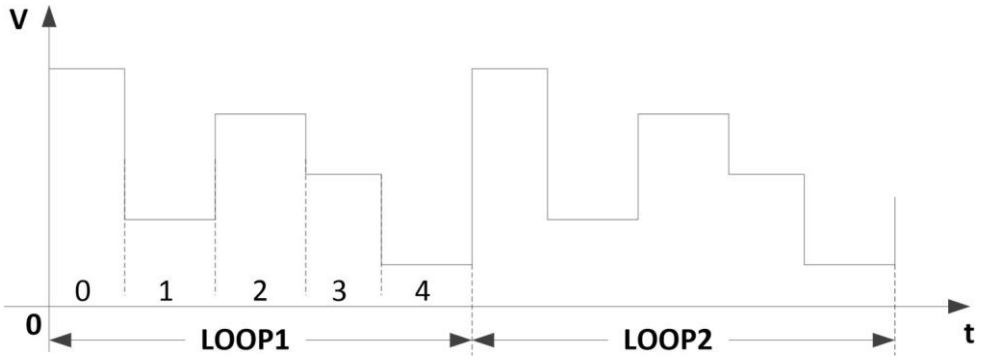

Output waveform for sequence testing

POWER-SPIN series provide 10 sequence files, each supporting up to 100 running steps. It canbe set the voltage setting, current setting and runtime in running step. Support “Cycle numbers “and “Link file”, The cycle numbers can control sequence cycle running numbers, set 0in infinite loop. The Link files can be used to run links between different files, set 0 to indicate nolink.

Remote sensing function

A voltage drop will be occurred on the connection line between the power supply and theload terminal when the load consumes high current, then remote sensing can automaticallycompensate for the voltage drop on the load line. The wiring diagram as below:

(Note: 1000V and above models do not have remote sensing function)

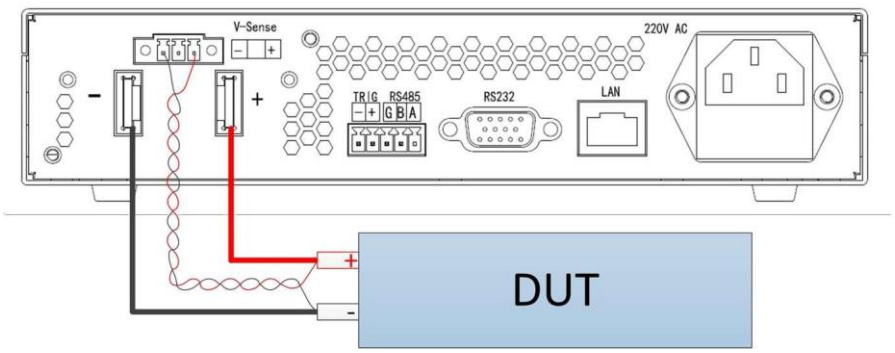

Battery charge function

POWER-SPIN series provide battery charge function, can define charge voltage,charge current, charge cut off voltage, charge cut off, current, charge cut off capacity、 charge cut off time etc， fully simulate the charging process of the battery, which can effectively protect the battery.

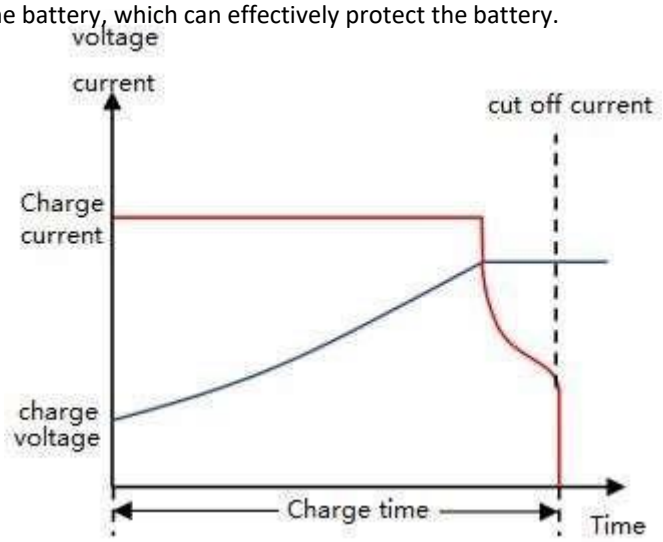

Part Numbers

Voltage	Model	Current	Power	Voltage	Model	Current	Power
15V	PS-S-AR-0.6-V015-A060	60A	600W	36V	PS-S-AR-0.6-V036-A030	30A	600W
	PS-S-AR-0.9-V015-A080	80A	900W		PS-S-AR-0.9-V036-A030	30A	900W
	PS-S-AR-1.5-V015-A120	120A	1500W		PS-S-AR-1.5-V036-A060	60A	1500W
	PS-S-AR-1.8-V015-A120	120A	1800W		PS-S-AR-1.8-V036-A060	60A	1800W
Voltage	Model	Current	Power	Voltage	Model	Current	Power
60V	PS-S-AR-0.6-V060-A015	15A	600W	60V	PS-S-AR-0.6-V060-A030	30A	600W
	PS-S-AR-0.9-V060-A015	15A	900W		PS-S-AR-0.9-V060-A030	30A	900W
	PS-S-AR-1.5-V060-A030	30A	1500W		PS-S-AR-1.5-V060-A060	60A	1500W
	PS-S-AR-1.8-V060-A030	30A	1800W		PS-S-AR-1.8-V060-A060	60A	1800W
Voltage	Model	Current	Power	Voltage	Model	Current	Power
80V	PS-S-AR-0.6-V080-A012	12A	600W	100V	PS-S-AR-0.6-V100-A010	10A	600W
	PS-S-AR-0.9-V080-A012	12A	900W		PS-S-AR-0.9-V100-A010	10A	900W
	PS-S-AR-1.5-V080-A024	24A	1500W		PS-S-AR-1.5-V100-A020	20A	1500W
	PS-S-AR-1.8-V080-A024	24A	1800W		PS-S-AR-1.8-V100-A020	20A	1800W
Voltage	Model	Current	Power	Voltage	Model	Current	Power
150V	PS-S-AR-0.6-V150-A012	12A	600W	300V	PS-S-AR-0.6-V300-A003	3A	600W
	PS-S-AR-0.9-V150-A012	12A	900W		PS-S-AR-0.9-V300-A003	3A	900W
	PS-S-AR-1.5-V150-A024	24A	1500W		PS-S-AR-1.5-V300-A006	6A	1500W
	PS-S-AR-1.8-V150-A024	24A	1800W		PS-S-AR-1.8-V300-A006	6A	1800W
Voltage	Model	Current	Power	Voltage	Model	Current	Power
600V	PS-S-AR-0.6-V600-A001.5	1.5A	600W	1000V	PS-S-AR-0.6-V1000-A000.9	0.9A	600W
	PS-S-AR-0.9-V600-A001.5	1.5A	900W		PS-S-AR-0.9-V1000-A000.9	0.9A	900W
	PS-S-AR-1.5-V600-A003	3A	1500W		PS-S-AR-1.5-V1000-A001.8	1.8A	1500W
	PS-S-AR-1.8-V600-A003	3A	1800W		PS-S-AR-1.8-V1000-A001.8	1.8A	1800W
Voltage	Model	Current	Power	Voltage	Model	Current	Power
2000V	PS-S-AR-0.6-V2000-A000.9	0.9A	600W	3000V	PS-S-AR-0.6-V3000-A000.3	0.3A	600W
	PS-S-AR-0.9-V2000-A000.9	0.9A	900W		PS-S-AR-0.9-V3000-A000.3	0.3A	900W
	PS-S-AR-1.5-V2000-A001.8	1.8A	1500W		PS-S-AR-1.5-V3000-A000.6	0.6A	1500W
	PS-S-AR-1.8-V2000-A001.8	1.8A	1800W		PS-S-AR-1.8-V3000-A000.6	0.6A	1800W

*Other voltage specifications can be customized through negotiation if there are batch requirements

Optional accessories

Item	Model or Spec	Description
RS485 interface	PS-RS485	
19inch shelf kit1	Rack19-01	Single device shelf kit
19 inch shelf kit2	Rack19-02	Two devices in parallel shelf kit
Stacking kit	Rack19-Stack	Multi-layer stacking kit

General Spec.	
Voltage temperature coefficient	50ppm/℃
Current temperature coefficient	100ppm/℃
Input characteristics	
AC input Voltage	180VAC～260VAC，frequency 47Hz～63Hz
Power factor	0.99@220Vac，rated output power
Max input current (full load)	600W：3.5A，900W：5A，1500W：8.75A，1800W：10A @220Vac
Environmental condition	
Operation temperature	0℃～40℃（full load）
Storage temperature	-20℃～70℃
Operation humidity	30%～90% RH（non-condensing）
Storage humidity	10%～95% RH（non-condensing）
Operation Altitude	＜2000m
Structural characteristics	
Communication interface	RS232 and LAN，optional RS485
Cooling method	Forced air flow from front to rear, no ventilation holes on the upper cover and base,variable speed fan
Dimension（W*H*D）	210*44*462 mm (600W，900W model) 430*44*462 mm (1500W & 1800W model)
Weight	4.5kg(600W，900W model)； 9kg(1500W & 1800W model)

Electrical Spec-1					
Model	**PS-S-AR-0.6-V015-A060**	**PS-S-AR-0.6-V036-A030**	**PS-S-AR-0.6-V060-A015**	**PS-S-AR-0.6-V060-A030**	**PS-S-AR-0.6-V080-A012**
Rated Voltage	0~15V	0~36V	0~60V	0~60V	0~80V
Rated Current	0~60A	0~30A	0~15A	0~30A	0~12A
Rated Power	**600W**				
Model	**PS-S-AR-0.9-V015-A060**	**PS-S-AR-0.9-V036-A030**	**PS-S-AR-0.9-V060-A015**	**PS-S-AR-0.9-V060-A030**	**PS-S-AR-0.9-V080-A012**
Voltage	0~15V	0~36V	0~60V	0~60V	0~80V
Current	0~60A	0~30A	0~15A	0~30A	0~12A
Power	**900W**				
Model	**PS-S-AR-1.5-V015-A120**	**PS-S-AR-1.5-V036-A060**	**PS-S-AR-1.5-V060-A030**	**PS-S-AR-1.5-V060-A060**	**PS-S-AR-1.5-V080-A024**
Voltage	0~15V	0~36V	0~60V	0~60V	0~80V
Current	0~120A	0~60A	0~30A	0~60A	0~24A
Power	**1500W**				
Model	**PS-S-AR-1.8-V015-A120**	**PS-S-AR-1.8-V036-A060**	**PS-S-AR-1.8-V060-A030**	**PS-S-AR-1.8-V060-A060**	**PS-S-AR-1.8-V080-A024**
Voltage	0~15V	0~36V	0~60V	0~60V	0~80V
Current	0~120A	0~60A	0~30A	0~60A	0~24A
Power	**1800W**				
Voltage programming*1					
Resolution	1mV	1mV	1mV	1mV	1mV
Accuracy	0.1%+0.1%F.S.				

Current programming*2						
Resolution		1mA	1mA	1mA	1mA	1mA
Accuracy		0.1%+0.1%F.S.				
Line regulation						
Voltage		≤0.02%F.S.				
Current		≤0.05%F.S.				
Load regulation						
Voltage		≤0.02%F.S.				
Current		≤0.05%F.S.+2mA				
Voltage measurement*1						
Resolution		1mV	1mV	1mV	1mV	1mV
Accuracy		0.1%+0.1%F.S.				
Current measurement*2						
Resolution		1mA	1mA	1mA	1mA	1mA
Accuracy		0.1%+0.1%F.S.				
Output noise and ripple						
Voltage ripple（Vp-p）		≤50mV	≤60mV	≤100mV	≤100mV	≤150mV
Voltage ripple（Vrms）		≤12mV	≤15mV	≤15mV	≤15mV	≤25mV
Current ripple (Arms）*3	≤900W	≤60mA	≤30mA	≤15mA	≤30mA	≤12mA
	>900W	≤120mA	≤60mA	≤30mA	≤60mA	≤24mA
Rise and fall time						
Rise time（no load）*4		50ms				
Rise time（full load）*5		50ms				
Fall time（no load）*6		2s				
Fall time（full load）*7		100ms				
Transient response time		Restore the output voltage deviation to within 0.5% of the rated voltage（50%-100% load）≤2ms				
Efficiency*8		0.86	0.86	0.88	0.88	0.88

Electrical Spec-2					
Model	**PS-S-AR-0.6-V100-A010**	**PS-S-AR-0.6-V120-A0008**	**PS-S-AR-0.6-V150-A006**	**PS-S-AR-0.6-V150-A012**	**PS-S-AR-0.6-V300-A003**
Rated Voltage	0~100V	0~120V	0~150V	0~150V	0~300V
Rated Current	0~10A	0~8A	0~6A	0~12A	0~3A
Rated Power	**600W**				
Model	**PS-S-AR-0.9-V100-A010**	**PS-S-AR-0.9-V120-A0008**	**PS-S-AR-0.9-V150-A006**	**PS-S-AR-0.9-V150-A012**	**PS-S-AR-0.9-V300-A003**
Rated Voltage	0~100V	0~120V	0~150V	0~150V	0~300V
Rated Current	0~10A	0~8A	0~6A	0~12A	0~3A
Rated Power	**900W**				
Model	**PS-S-AR-1.5-V100-A020**	**PS-S-AR-1.5-V120-A016**	**PS-S-AR-1.5-V150-A012**	**PS-S-AR-1.5-V150-A024**	**PS-S-AR-1.5-V300-A006**
Rated Voltage	0~100V	0~120V	0~150V	0~150V	0~300V
Rated Current	0~20A	0~16A	0~12A	0~24A	0~6A
Rated Power	**1500W**				
Model	**PS-S-AR-1.8-V100-A020**	**PS-S-AR-1.8-V120-A0016**	**PS-S-AR-1.8-V150-A012**	**PS-S-AR-1.8-V150-A024**	**PS-S-AR-1.8-V300-A006**
Rated Voltage	0~100V	0~120V	0~150V	0~150V	0~300V
Rated Current	0~20A	0~16A	0~12A	0~24A	0~6A
Rated Power	**1800W**				
Voltage programming*1					
Resolution	10mV	10mV	10mV	10mV	10mV
Accuracy	0.1%+0.1%F.S.				
Current programming*2					
Resolution	1mA	1mA	1mA	1mA	1mA
Accuracy	0.1%+0.1%F.S.				
Line regulation					
Voltage	≤0.02%F.S.				
Current	≤0.05%F.S.				
Load regulation					
Voltage	≤0.02%F.S.				
Current	≤0.05%F.S.+2mA				

Voltage measurement*1						
Resolution		10mV	10mV	10mV	10mV	10mV
Accuracy		0.1%+0.1%F.S.				
Current measurement*2						
Resolution		1mA	1mA	1mA	1mA	1mA
Accuracy		0.1%+0.1%F.S.				
Output noise and ripple						
Voltage ripple（Vp-p）		≤200mV	≤200mV	≤200mV	≤200mV	≤300mV
Voltage ripple（Vrms）		≤30mV	≤30mV	≤30mV	≤30mV	≤75mV
Current ripple（Arms）*3	≤900W	≤10mA	≤8mA	≤6mA	≤12mA	≤3mA
	>900W	≤20mA	≤16mA	≤12mA	≤24mA	≤6mA
Rise and fall time						
Rise time（no load）*4		100ms	100ms			200ms
Rise time（full load）*5		100ms	100ms			200ms
Fall time（no load）*6		2.5s	2.5s			3s
Fall time（full load）*7		100ms	100ms			120ms
Transient response time		Restore the output voltage deviation to within 0.5% of the rated voltage（50%-100% load）≤2ms				
Efficiency*8		0.88	0.88	0.88	0.88	0.88

Electrical Spec-3				
Model	**PS-S-AR-0.6-V600-A001.5**	**PS-S-AR-0.6-V1000-A000.9**	**PS-S-AR-0.6-V2000-A000.9**	**PS-S-AR-0.6-V3000-A000.3**
Rated Voltage	0~600V	0~1000V	0~2000V	0~3000V
Rated Current	0~1.5A	0~0.9A	0~0.9A	0~300mA
Rated Power	**600W**			
Model	**PS-S-AR-0.9-V600-A001.5**	**PS-S-AR-0.9-V1000-A000.9**	**PS-S-AR-0.9-V2000-A000.9**	**PS-S-AR-0.9-V3000-A000.3**
Rated Voltage	0~600V	0~1000V	0~2000V	0~3000V
Rated Current	0~1.5A	0~0.9A	0~0.9A	0~300mA
Rated Power	**900W**			
Model	**PS-S-AR-01.5-V600-A003**	**PS-S-AR-1.5-V1000-A001.8**	**PS-S-AR-1.5-V2000-A001.8**	**PS-S-AR-1.5-V3000-A000.6**
Rated Voltage	0~600V	0~1000V	0~2000V	0~3000V
Rated Current	0~3A	0~1.8A	0~1.8A	0~600mA
Rated Power	**1500W**			

Model		PS-S-AR-1.8-V600-A003	PS-S-AR-1.8-V1000-A001.8	PS-S-AR-1.8-V2000-A001.8	PS-S-AR-1.8-V3000-A000.6
Rated Voltage		0~600V	0~1000V	0~2000V	0~3000V
Rated Current		0~3A	0~1.8A	0~1.8A	0~600mA
Rated Power		**1800W**			
Voltage programming*1					
Resolution		10mV	100mV	100mV	100mV
Accuracy		0.1%+0.1%F.S.			
Current programming*2					
Resolution		1mA	1mA	1mA	1mA
Accuracy		0.1%+0.2%F.S.			0.1%+1mA
Line regulation					
Voltage		≤0.02%F.S.			
Current		≤0.05%F.S.			
Load regulation					
Voltage		≤0.02%F.S.			
Current		≤0.05%F.S.+2mA			
Voltage measurement*1					
Resolution		10mV	100mV	100mV	100mV
Accuracy		0.1%+0.1%F.S.			
Current measurement*2					
Resolution		1mA	1mA	1mA	1mA
Accuracy		0.1%+0.2%F.S.			0.1%+1mA
Output noise and ripple					
Voltage ripple（Vp-p）		≤600mV	≤1000mV	≤300mV	≤3500mV
Voltage ripple（Vrms）		≤125mV	≤200mV	≤75mV	≤600mV
Current ripple（Arms）*3	≤900W	≤3mA	≤1mA	≤3mA	≤1mA
	>900W	≤6mA	≤2mA	≤6mA	≤1mA
Rise and fall time					
Rise time（no load）*4		250ms	≤250ms	≤400ms	≤400ms
Rise time（full load）*5		250ms	≤250ms	≤400ms	≤400ms
Fall time（no load）*6		3.5s	≤8s	≤12s	≤15s
Fall time（full load）*7		150ms	≤250ms	≤400ms	≤400ms
Transient response time		Restore the output voltage deviation to within 0.5% of the rated voltage（50%-100% load）≤2ms			
Efficiency*8		0.88	0.88	0.88	0.88

Remarks:

* All specifications are subject to change without notice;

*1. The minimum voltage shall be ≥ 0.2% F.S;

*2. The minimum current value must be ≥ 0.2% F.S;

*3. Ripple measurement condition is 10%~100% of rated voltage and rated current;

*4. Change time of rated voltage from 10% to 90% under no-load condition;

*5. Change time of rated voltage from 10% to 90% under full load (resistive load);

*6. Change time of rated voltage from 90% to 10% under no-load condition;

*7. Change time of rated voltage from 90% to 10% under full load (resistive load);

*8. The value is measured at 220Vac/50Hz input, rated voltage and maximum power output.

Dimensions

600W, 900W model

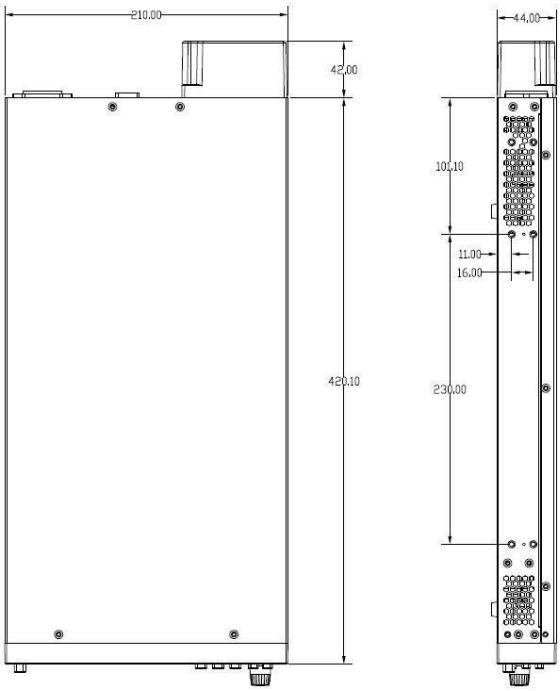

1500W, 1800W model